Current part is item (44) on diagram. Available at www.oshkoshequipment.com

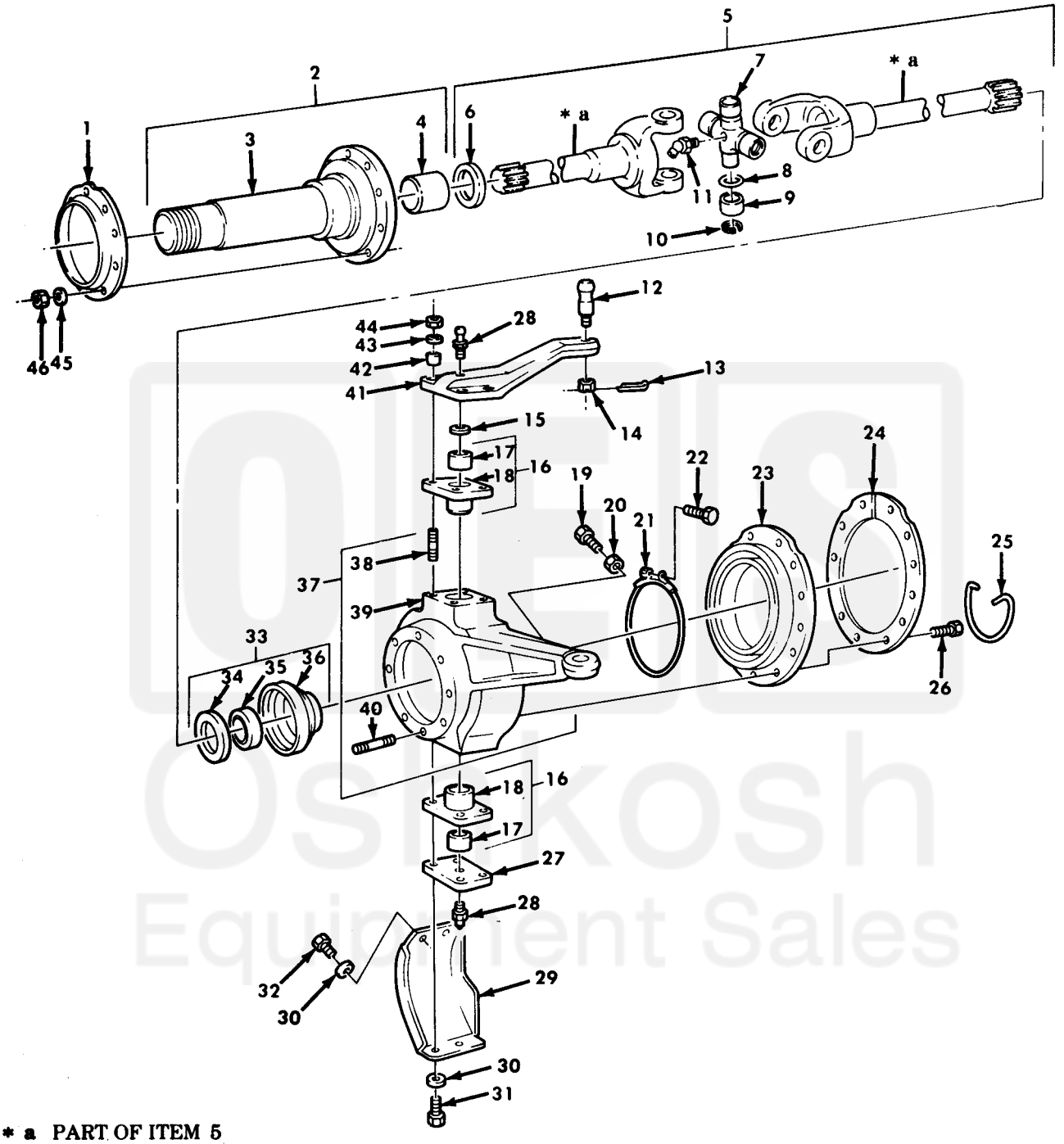

Figure 172. Spindle Shaft Assembly, Universal Shaft, and Knuckle Assembly.

Current part is item (44) on diagram. Available at www.oshkoshequipment.com

Current part is item (44) on diagram. Available at www.oshkoshequipment.com

(1) ILLUS. (a) FIG. NO.	(b) ITEM NO.	(2) SMR CODE	(3) NATIONAL STOCK NUMBER	(4) PART NUMBER	(5) FSCM	(6) DESCRIPTION USABLE ON CODE	(7) U/M	(8) QTY INC IN UNIT
						GROUP 1004 STEERING FIG.172 SPINDLE SHAFT ASSEMBLY,UNIVERSAL SHAFT,AND KNUCKLE ASSEMBLY		
172	1	PAOZZ	2805-01-093-4266	12256157	19207	DEFLECTOR,DIRT AND SPINDLE	EA	2
172	2	PAOFF	2530-00-734-6982	7346982	19207	SPINDLE,WHEEL	EA	2
172	3	XAOZZ		8758276	19207	SPINDLE	EA	1
172	4	PAFZZ	3120-00-537-0614	7346983	19207	BEARING,SLEEVE	EA	1
172	5	PAOOO		A1-3202-G-8093	78500	SHFT,UNIVERSAL LEFT	EA	1
172	5	PAOOO		A1-3202-H-8094	78500	SHAFT,UNIVERSAL RIGHT	EA	1
172	6	PAOZZ	5310-00-033-6007	7346986	19207	WASHER,FLAT	EA	1
172	7	KFOZZ		850N1-4A	78500	CROSS ASSEMBLY PART OF KIT P/N 5704528	EA	1
172	8	KFOZZ		SE-RUR22-2	78500	SEAL PART OF KIT P/N 5704528	EA	4
172	9	KFOZZ		850N4A	78500	CUP ASSEMBLY PART OF KIT P/N 5704528	EA	4
172	10	KFOZZ		850N20	78500	RING,RETAINING PART OF KIT P/N 5704528	EA	4
172	11	PAOZZ	4730-00-172-0031	MS15003-5	96906	FITTING,LUBRICATION	EA	1
172	12	PAFZZ	5307-00-483-1105	11664599	19207	STUD,BALL	EA	1
172	13	PAFZZ	5315-00-298-1481	MS24665-357	96906	PIN,COTTER	EA	2
172	14	PAFZZ	5310-00-835-2140	MS35692-69	96906	NUT,PLAIN,SLOTTED	EA	2
172	15	PAFZZ	5310-00-312-0808	1244B548	78500	SHIM .125	EA	V
172	15	PAFZZ	5310-01-054-2568	8758280	19207	SHIM .135	EA	V
172	15	PAFZZ	5310-01-128-1592	1224-D-551	78500	SHIM .145	EA	V
172	15	PAFZZ	5310-01-134-0209	8758282	19207	SHIM .155	EA	V
172	15	PAFZZ	5310-01-134-5791	8758283	19207	SHIM .165	EA	V
172	15	PAFZZ	5365-01-055-8769	1224-G-553	78500	SHIM .175	EA	V
172	16	PAFFF	2530-00-734-6971	7346971	19207	SLEEVE	EA	4
172	17	PAHZZ	3120-00-288-1889	7346972	19207	BEARING,SLEEVE	EA	1
172	18	XAFZZ		8758253	19207	SLEEVE,STEERING	EA	1
172	19	PAFZZ	5306-00-281-1651	5225875	19207	BOLT,MACHINE	EA	1
172	20	PAFZZ	5310-00-763-8919	MS51967-18	96906	NUT,PLAIN,HEXAGON	EA	1
172	21	PAOZZ	5340-01-118-5972	12300575	19207	CLAMP ASSEMBLY	EA	2
172	22	PAOZZ	5304-00-143-3266	MS27039-0825	96906	SCREW,MACHINE PART OF KIT P/N 5704510	EA	2
172	23	PAOZZ	2530-00-421-7227	8327123	19207	BOOT,DUST PART OF KIT P/N 5704510	EA	2
172	24	PAOZZ	2520-00-734-6975	7346975	19207	RING,DIFFERENTIAL	EA	2
172	25	MOOZZ		22-W-1642-100-40	10001	WIRE MAKE FROM WIRE,P/N 22-W-1642-100	EA	2
172	26	PAOZZ	5305-00-551-5097	MS35265-94	96906	SCREW,MACHINE	EA	24
172	27	PAFZZ	2530-00-734-6974	7346974	19207	COVER,ACCESS	EA	2
172	28	PAOZZ	4730-00-050-4208	MS15003-1	96906	FITTING,LUBRICATION	EA	4
172	29	PAOZZ	2520-00-734-6977	7346977	19207	GUARD,BRUSH KNUCKLE LEFT	EA	1
172	29	PAOZZ	2530-00-734-6978	7346978	19207	GUARD,BRUSH KNUCKLE RIGHT	EA	1
172	30	PAOZZ	5310-00-820-6653	23MS35338-50	80045	WASHER,LOCK	EA	12
172	31	PAOZZ	5305-00-724-7223	MS90728-165	96906	SCREW,CAP,HEXAGON	EA	8
172	31	PAOZZ	5305-00-724-7219	MS90728-160	96906	SCREW,CAP,HEXAGON	EA	4

Current part is item (44) on diagram. Available at www.oshkoshequipment.com

Current part is item (44) on diagram. Available at www.oshkoshequipment.com

(1) ILLUS. (a) FIG. NO.	(2) (b) ITEM NO.	(3) SMR CODE	(4) NATIONAL STOCK NUMBER	(5) PART NUMBER	(6) FSCM	(7) DESCRIPTION USABLE ON CODE	(7) U/M	(8) QTY INC IN UNIT
172	33	PAOOO	2520-00-734-6951	7346951	19207	SEAL ASSEMBLY	EA	2
172	34	PAOZZ	5310-00-033-6007	7346986	19207	WASHER,FLAT	EA	1
172	35	PAOZZ	5330-01-132-5312	10938292	19207	SEAL,PLAIN,ENCASED	EA	1
172	36	PAOZZ	5330-01-098-6668	8758268	19207	RETAINER,OIL SEAL	EA	1
172	37	PAFOO	2530-00-734-6815	7346815	19207	KNUCKLE ASSEMBLY LEFT	EA	1
172	37	PAFOO	2520-00-006-7469	7346816-1	19207	KNUCKLE ASSEMBLY RIGHT	EA	1
172	38	PAFZZ	5307-00-734-6900	7346900	19207	STUD,PLAIN	EA	4
172	39	XAFZZ		8758352	19207	HOUSING,FRONT AXLE LEFT	EA	1
172	39	XAFZZ		8758252-1	19207	HOUSING,FRONT AXLE RIGHT	EA	1
172	40	PAFZZ	5307-00-734-6811	7346811	19207	STUD,PLAIN	EA	10
172	41	PAFZZ	2530-01-088-9357	11664597-1	19207	ARM,STEERING LEFT	EA	1
172	41	PAFZZ	2530-00-231-0178	11664598	19207	ARM,STEERING RIGHT	EA	1
172	42	PAFZZ	5340-00-437-2282	7346812	19207	BUSHING,TAPERED	EA	8
172	43	PAFZZ	5310-00-800-0695	MS35335-39	96906	WASHER,LOCK	EA	8
172	44	PAFZZ	5310-00-274-7721	7346813	19207	NUT,PLAIN,HEXAGON	EA	8
172	45	PAOZZ	5310-00-616-6354	MS35335-33	96906	WASHER,LOCK	EA	20
172	46	PAOZZ	5310-00-763-8711	MS51968-17	96906	NUT,PLAIN,HEXAGON	EA	20

END OF FIGURE

Current part is item (44) on diagram. Available at www.oshkoshequipment.com